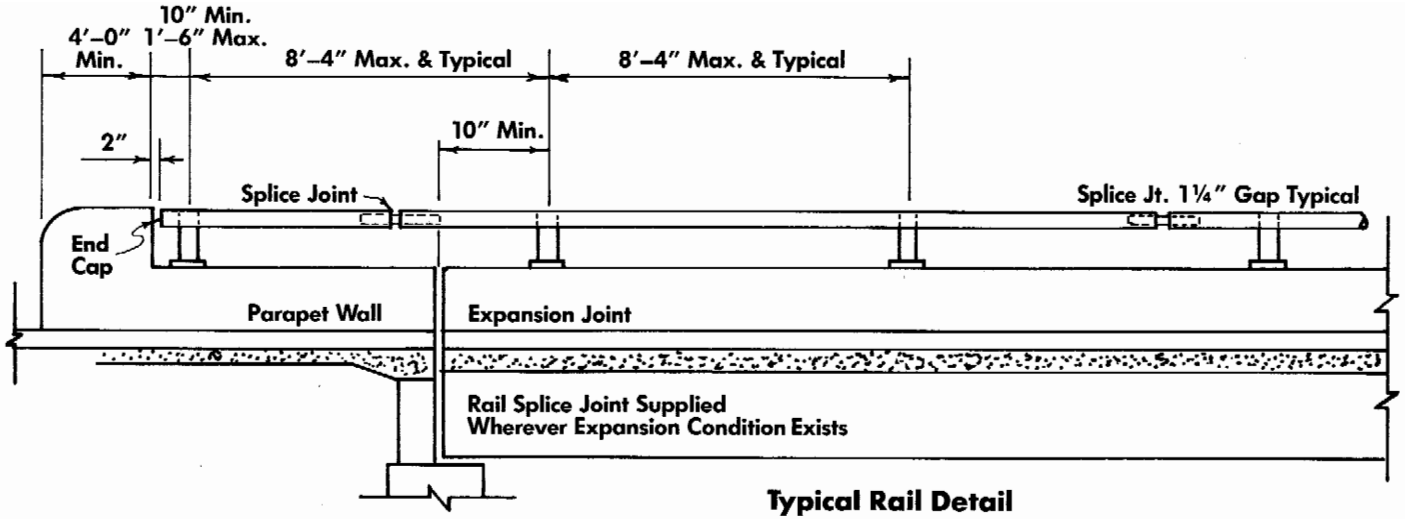

Typical Rail Detail

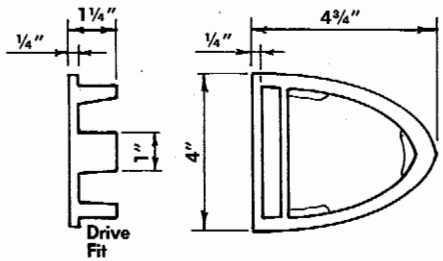

End Cap Detail

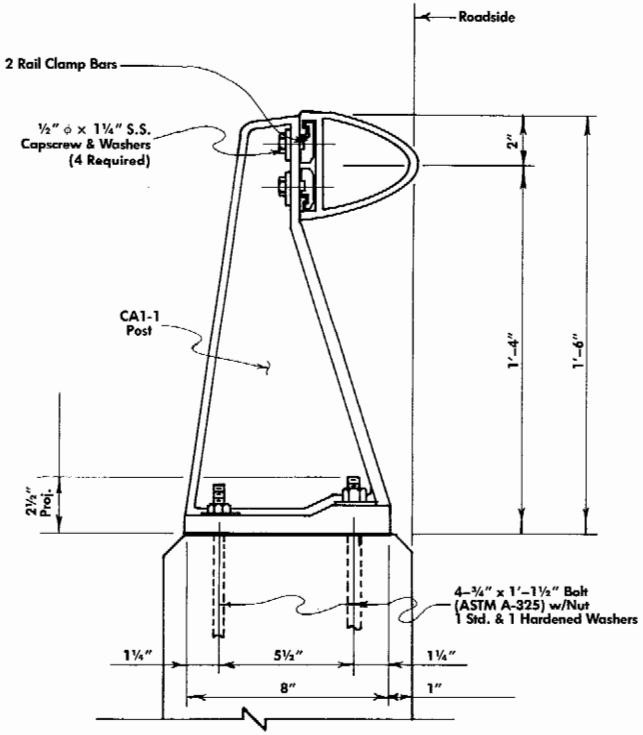

Typical Thru Section

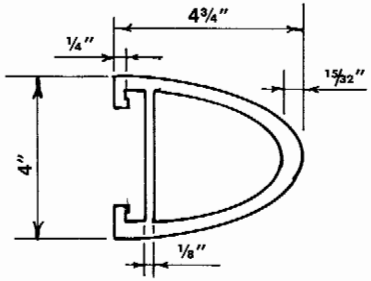

Rail Member

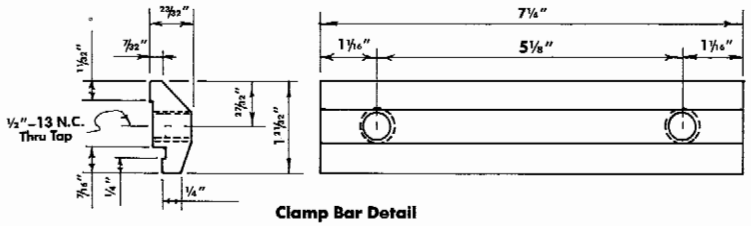

Clamp Bar Detail

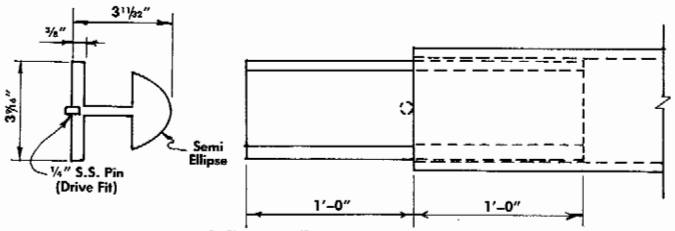

Splice Detail

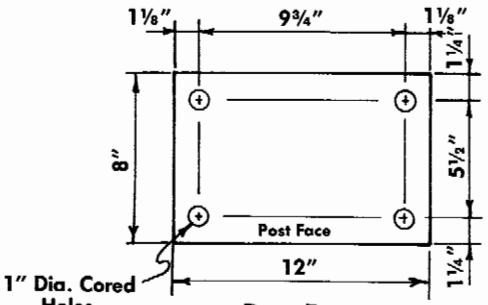

Post Base

Neoprene Pad Similar

Aluminum Combination Rail CA1-1

GENERAL NOTES:

- Posts Shall Be Cast Alum. Alloy A444-T4.
- Material For Rails & Splice & Clamp Bars Shall Be Alum. Alloy 6061-T6.
- Machine Screws For Rail Attachments Shall Be Stainless Steel.
- Anchor Bolts Shall Be ASTM A-325, Hot Dip Galvanized.
- This Rail Is Designed According To AASHTO 1977 Std, & Conforms To State Of Texas Std. For C-4 Rail.

Gordon's Specialties Inc.
Dallas, Texas